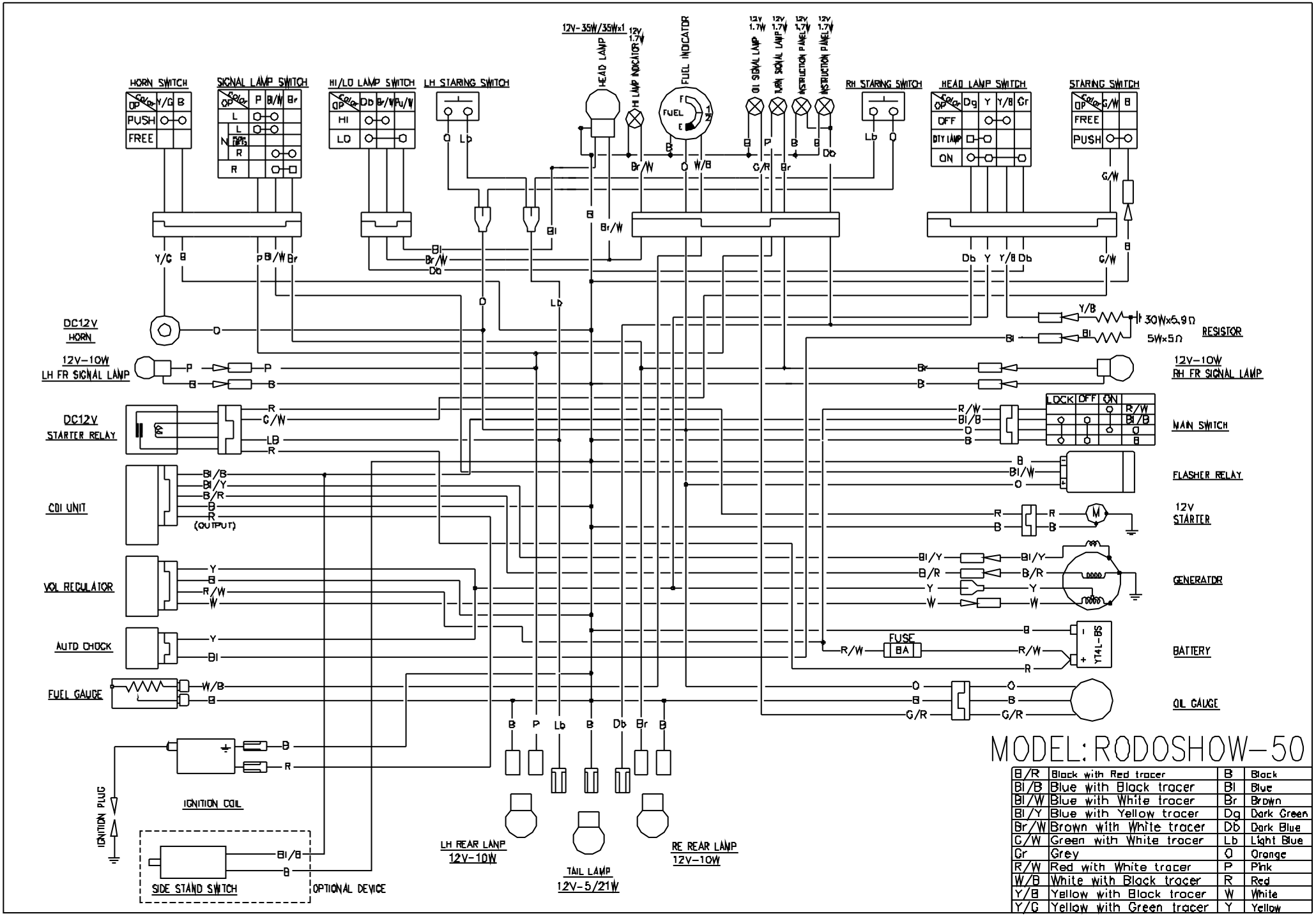

B/R	Black with Red tracer	B	Black
Bl/B	Blue with Black tracer	Bl	Blue
Bl/W	Blue with White tracer	Br	Brown
Bl/Y	Blue with Yellow tracer	Dg	Dark Green
Br/W	Brown with White tracer	Db	Dark Blue
G/W	Green with White tracer	Lb	Light Blue
Gr	Grey	O	Orange
R/W	Red with White tracer	P	Pink
W/B	White with Black tracer	R	Red
Y/B	Yellow with Black tracer	W	White
Y/G	Yellow with Green tracer	Y	Yellow